Work Order ID 57157

March 24, 2010 8:43:25 AM

Item ID: D206-642-341 **Accept** **Setup** **Start**

Revision ID: **Stop**

Item Name: Replacement Skidtube

Start Date: 24/03/2010 **Start Qty:** 1.00 **Cust Item ID:**

Required Date: 07/04/2010 **Req'd Qty:** 1.00 **Customer:**

Reference:

Approvals: **Process Plan:** ___ **Date:** 10324 **Tooling:** ___ **Date:** ___ **Run** **Start**

QC: ___ **Date:** ___ **SPC (Y/N):** ___ **Date:** ___ **Stop**

Sequence ID/ Work Center ID	Operation Description	Set Up/ Run Hours	Draw Number	Draw Rev.	Plan Code	Accept Qty	Reject Qty	Reject Number	Insp. Stamp
Draw Nbr	**Revision Nbr**								
D2650	F								
100		0.00							
DC	DOCUMENT CONTROL					N/A			
Document Control	**Memo**	0.00							
	Photocopy bluefile and create labels per PPP D206-642-341 CHG003								

Dart Aerospace Ltd

W/O:		WORK ORDER CHANGES					
DATE	STEP	PROCEDURE CHANGE	By	Date	Qty	Approval Chief Eng / Prod Mgr	Approval QC Inspector

Part No: _____ PAR #: _____ Fault Category: _____ NCR: Yes No DQA: _____ Date: _____

Resolution: _____ Disposition: _____ QA: N/C Closed: _____ Date: _____

NCR:		WORK ORDER NON-CONFORMANCE (NCR)						
DATE	STEP	Description of NC Section A	Corrective Action Section B			Verification Section C	Approval Chief Eng	Approval QC Inspector
			Initial Chief Eng	Action Description Chief Eng	Sign & Date			

NOTE: Date & initial all entries

H:\fFORMS\Quality Assurance\approved QA\NCRWO RevE

Work Order ID 57157

March 24, 2010 8:43:25 AM

Item ID: D206-642-341 **Accept** **Setup Start**

Revision ID: **Stop**

Item Name: Replacement Skidtube

Start Date: 24/03/2010 **Start Qty:** 1.00 **Cust Item ID:**

Required Date: 07/04/2010 **Req'd Qty:** 1.00 **Customer:**

Reference:

Approvals: **Process Plan:** _____ **Date:** _____ **Tooling:** _____ **Date:** _____ **Run Start**

QC: _____ **Date:** _____ **SPC (Y/N):** _____ **Date:** _____ **Stop**

Sequence ID/ Work Center ID	Operation Description	Set Up/ Run Hours	Draw Number	Draw Rev.	Plan Code	Accept Qty	Reject Qty	Reject Number	Insp. Stamp
110		0.00							
Skidtubes	Skidtubes								
Skidtubes	**Memo**	0.00							

1-Deburr Fwd edge of tube

2-Remove ridge on inside of Fwd edge of tubeas per Dwg D2650

3-Weld Fwd Cap as per Dwg D2650. Use aluminum rod. Grind D2647 to fit as required.
A/R□□Aluminum Rod□ M112507/ M113207 BE 10-03-30

4-Grind weld flush to cap on top surface only. BE 10-03-30

5-Cut aft end to lenght as per dwg D2650

6-Drill pilot holes using drill Jig DT8168A (A,& B) and DT8025. Open to Ø0.312"

7-Drill holes for wearplates using DT 8028-5. Open to Ø 0.297".

8-Open Aft Cap Hole using #6 Drill Bit

9-Open holes for Tow Ring to Ø0.625" as per Dwg D2650, D2650-5 Drilling Detail

10-Remove inner indexing ridge on aft end of skidtubeas per Dwg D2650

11-Deburr and Blow out all chips form inside the tube

10-3-30

10-3-30

Dart Aerospace Ltd

W/O:		WORK ORDER CHANGES					
DATE	STEP	PROCEDURE CHANGE	By	Date	Qty	Approval Chief Eng / Prod Mgr	Approval QC Inspector

Part No: _____ PAR #: _____ Fault Category: _____ NCR: Yes No DQA: _____ Date: _____

Resolution: _____ Disposition: _____ QA: N/C Closed: _____ Date: _____

NCR:		WORK ORDER NON-CONFORMANCE (NCR)						
DATE	STEP	Description of NC Section A	Corrective Action Section B			Verification Section C	Approval Chief Eng	Approval QC Inspector
			Initial Chief Eng	Action Description Chief Eng	Sign & Date			

NOTE: Date & initial all entries

H:\fFORMS\Quality Assurance\approved QA\NCRWO RevE

Work Order ID 57157

March 24, 2010 8:43:25 AM

Item ID: D206-642-341 **Accept** **Setup Start**

Revision ID: **Stop**

Item Name: Replacement Skidtube

Start Date: 24/03/2010 **Start Qty:** 1.00 **Cust Item ID:**

Required Date: 07/04/2010 **Req'd Qty:** 1.00 **Customer:**

Reference:

Approvals: **Process Plan:** _____ **Date:** _____ **Tooling:** _____ **Date:** _____ **Run Start**

QC: _____ **Date:** _____ **SPC (Y/N):** _____ **Date:** _____ **Stop**

Sequence ID/ Work Center ID	Operation Description	Set Up/ Run Hours	Draw Number	Draw Rev.	Plan Code	Accept Qty	Reject Qty	Reject Number	Insp. Stamp
120	Chemical Conversion Coat per QSI005 4.1	0.00							
HandFinish						1	1	10/3/31	
Hand Finishing	**Memo**	0.00							
130		0.00							
Skidtubes	Skidtubes					1	-	-	AWM 10-3-31
Skidtubes	**Memo**	0.00							

1-Open holes to finished size as per Dwg D2650, D2650-5 Drilling Detail (without cutting fluid)

2-Countersink crossbolt spacer holes as per Dwg D2650(without cutting fluid)

3-Deburr. Blow out chips. Grind alodine off around crossbolt spacer.

4-Bond D2654-5 web in place as per QSI 015Ensure holes line upAllow 12 Hrs. cure time before cutting☐
Start Date: 10-3-31 ☐Time:☐ 9:09 ☐
Finish Date: 10/04/05 ☐Time:☐ 8:10 AM
A/R☐☐Sikaflex-291☐ 112427 ☐☐
Sikaflex expiry date:☐ 10-9-20

Dart Aerospace Ltd

W/O:		WORK ORDER CHANGES					
DATE	STEP	PROCEDURE CHANGE	By	Date	Qty	Approval Chief Eng / Prod Mgr	Approval QC Inspector

Part No: _____ PAR #: _____ Fault Category: _____ NCR: Yes No DQA: _____ Date: _____

Resolution: _____ Disposition: _____ QA: N/C Closed: _____ Date: _____

NCR:		WORK ORDER NON-CONFORMANCE (NCR)						
DATE	STEP	Description of NC Section A	Corrective Action Section B			Verification Section C	Approval Chief Eng	Approval QC Inspector
			Initial Chief Eng	Action Description Chief Eng	Sign & Date			

NOTE: Date & initial all entries

H:\fFORMS\Quality Assurance\approved QA\NCRWO RevE

Work Order ID 57157

March 24, 2010 8:43:25 AM

Item ID: D206-642-341 **Accept** **Setup Start**

Revision ID: **Stop**

Item Name: Replacement Skidtube

Start Date: 24/03/2010 **Start Qty:** 1.00 **Cust Item ID:**

Required Date: 07/04/2010 **Req'd Qty:** 1.00 **Customer:**

Reference:

Approvals: **Process Plan:** _____ **Date:** _____ **Tooling:** _____ **Date:** _____ **Run Start**

QC: _____ **Date:** _____ **SPC (Y/N):** _____ **Date:** _____ **Stop**

Sequence ID/ Work Center ID	Operation Description	Set Up/ Run Hours	Draw Number	Draw Rev.	Plan Code	Accept Qty	Reject Qty	Reject Number	Insp. Stamp
140	QC5- Inspect part completeness to step on W/O	0.00							
QC									
Quality Control	**Memo**	0.00							
150	Skidtubes	0.00							
Skidtubes									
Skidtubes	**Memo**	0.00							

8 10/04/05

1-Prep per QSI 005 and Insert cross bolt spacers D2649. Weld as per QSI 004 and Dwg D2650. Remember to back drill each hole to 0.25" before welding the other side. Use aluminum rod.
A/R☐☐Aluminum Rod☐ M112507

2-Grind welds flush as per Dwg D2650. Masking Tape access to inside of the Skidtube

3-Counterbore 5/16" x 0.750" deep as per Dwg D2650Deburr

4- Install nut plate as per dwg

DP 10-4-5

Dart Aerospace Ltd

W/O:		WORK ORDER CHANGES					
DATE	STEP	PROCEDURE CHANGE	By	Date	Qty	Approval Chief Eng / Prod Mgr	Approval QC Inspector

Part No: _____ **PAR #:** _____ **Fault Category:** _____ **NCR:** Yes No **DQA:** _____ **Date:** _____

Resolution: _____ **Disposition:** _____ **QA: N/C Closed:** _____ **Date:** _____

NCR:		WORK ORDER NON-CONFORMANCE (NCR)						
DATE	STEP	Description of NC Section A	Corrective Action Section B			Verification Section C	Approval Chief Eng	Approval QC Inspector
			Initial Chief Eng	Action Description Chief Eng	Sign & Date			

NOTE: Date & initial all entries

H:\fFORMS\Quality Assurance\approved QA\NCRWO RevE

Work Order ID 57157

March 24, 2010 8:43:25 AM

Item ID: D206-642-341 **Accept** **Setup Start**

Revision ID: **Stop**

Item Name: Replacement Skidtube

Start Date: 24/03/2010 **Start Qty:** 1.00 **Cust Item ID:**

Required Date: 07/04/2010 **Req'd Qty:** 1.00 **Customer:**

Reference:

Approvals: **Process Plan:** _____ **Date:** _____ **Tooling:** _____ **Date:** _____ **Run Start**

QC: _____ **Date:** _____ **SPC (Y/N):** _____ **Date:** _____ **Stop**

Sequence ID/ Work Center ID	Operation Description	Set Up/ Run Hours	Draw Number	Draw Rev.	Plan Code	Accept Qty	Reject Qty	Reject Number	Insp. Stamp
160 HandFinish Hand Finishing	HandFinishing	0.00							
	Memo	0.00							
	Install D2680-041 Nut Plate as per Dwg D2650								
170 QC Quality Control	QC10- Inspect visual per QSI004- ground welds	0.00							
	Memo	0.00							
180 QC Quality Control	QC5- Inspect part completeness to step on W/O	0.00							
	Memo	0.00							

10-04-05

N/A done on seq #50

DP 10-4-5

8/10/04/06

8/10/04/06

Dart Aerospace Ltd

W/O:		WORK ORDER CHANGES					
DATE	STEP	PROCEDURE CHANGE	By	Date	Qty	Approval Chief Eng / Prod Mgr	Approval QC Inspector

Part No: _____ **PAR #:** _____ **Fault Category:** _____ **NCR:** Yes No **DQA:** _____ **Date:** _____

Resolution: _____ **Disposition:** _____ **QA: N/C Closed:** _____ **Date:** _____

NCR:		WORK ORDER NON-CONFORMANCE (NCR)						
DATE	STEP	Description of NC Section A	Corrective Action Section B			Verification Section C	Approval Chief Eng	Approval QC Inspector
			Initial Chief Eng	Action Description Chief Eng	Sign & Date			

NOTE: Date & initial all entries

H:\fFORMS\Quality Assurance\approved QA\NCRWO RevE

Work Order ID 57157

March 24, 2010 8:43:25 AM

Item ID: D206-642-341 **Accept** **Setup Start** **Stop**

Revision ID:

Item Name: Replacement Skidtube

Start Date: 24/03/2010 **Start Qty:** 1.00 **Cust Item ID:**

Required Date: 07/04/2010 **Req'd Qty:** 1.00 **Customer:**

Reference:

Run Start **Stop**

Approvals: **Process Plan:** _____ **Date:** _____ **Tooling:** _____ **Date:** _____

QC: _____ **Date:** _____ **SPC (Y/N):** _____ **Date:** _____

Sequence ID/ Work Center ID	Operation Description	Set Up/ Run Hours	Draw Number	Draw Rev.	Plan Code	Accept Qty	Reject Qty	Reject Number	Insp. Stamp
190 HandFinish Hand Finishing	Pressure Wash per QSI005 4.3	0.00							
	Memo Brush alodine tube on crossbolt spacer area, do not acid etch, do not dip tube in tank.	0.00	BR 10-4-7				0		
200 Powdercoat Powder Coating	White Gloss(Ref:4.3.5.1) per QSI005 4.3-Alum M113170	0.00							
	Memo START TIME: 10:45AM OVEN TEMPERATURE: 320°F FINISH TIME: 11:15AM	0.00	=> JS 10/04/07			1	0		
210 QC Quality Control	QC3- Inspect Part Finish	0.00							
	Memo	0.00	BR 10-4-8			0	0		

Dart Aerospace Ltd

W/O:		WORK ORDER CHANGES					
DATE	STEP	PROCEDURE CHANGE	By	Date	Qty	Approval Chief Eng / Prod Mgr	Approval QC Inspector

Part No: _____ PAR #: _____ Fault Category: _____ NCR: Yes No DQA: _____ Date: _____

Resolution: _____ Disposition: _____ QA: N/C Closed: _____ Date: _____

NCR:		WORK ORDER NON-CONFORMANCE (NCR)						
DATE	STEP	Description of NC Section A	Corrective Action Section B			Verification Section C	Approval Chief Eng	Approval QC Inspector
			Initial Chief Eng	Action Description Chief Eng	Sign & Date			

NOTE: Date & initial all entries

H:\fFORMS\Quality Assurance\approved QA\NCRWO RevE

Work Order ID 57157

March 24, 2010 8:43:25 AM

Item ID: D206-642-341 **Accept** **Setup Start** **Stop**

Revision ID:

Item Name: Replacement Skidtube

Start Date: 24/03/2010 **Start Qty:** 1.00 **Cust Item ID:**

Required Date: 07/04/2010 **Req'd Qty:** 1.00 **Customer:**

Reference:

Run Start **Stop**

Approvals: **Process Plan:** _____ **Date:** _____ **Tooling:** _____ **Date:** _____

QC: _____ **Date:** _____ **SPC (Y/N):** _____ **Date:** _____

Sequence ID/ Work Center ID	Operation Description	Set Up/ Run Hours	Draw Number	Draw Rev.	Plan Code	Accept Qty	Reject Qty	Reject Number	Insp. Stamp
220		0.00							
HandFinish	HandFinishing								
Hand Finishing		0.00							

Memo

1-Install inserts & wearpads as per dwg D2922. Use a drop of Sikaflex inside insert holes before installing wearpad/wearplate.
A/R□□Sikaflex-291□ M112429
Sikaflex expiry date:□ 10/08

2-Install O-Rings D2651-3 on plugs D2651-1 with Petroleum Jelly and install plugs as per Dwg D2650. Clean excess adhesive

3-Install MS27039-4-06 Screw as per DEO 9153

4-Inspect for foreign object per QSI 024

5-Install D2646 Aft Cap and seal with SikaflexClean excess adhesive
A/R□□Sikaflex-291□ M112429
Sikaflex expiry date:□ 10/08

6-Wing Walk as per Dwg D2650-5 and QSI 005 4.4□
Batch: M113545.

bl 10-4-16, ①.

bl 10-4-16

Dart Aerospace Ltd

W/O:		WORK ORDER CHANGES					
DATE	STEP	PROCEDURE CHANGE	By	Date	Qty	Approval Chief Eng / Prod Mgr	Approval QC Inspector

Part No: _____ PAR #: _____ Fault Category: _____ NCR: Yes No DQA: _____ Date: _____

Resolution: _____ Disposition: _____ QA: N/C Closed: _____ Date: _____

NCR:		WORK ORDER NON-CONFORMANCE (NCR)						
DATE	STEP	Description of NC Section A	Corrective Action Section B			Verification Section C	Approval Chief Eng	Approval QC Inspector
			Initial Chief Eng	Action Description Chief Eng	Sign & Date			

NOTE: Date & initial all entries

H:\fFORMS\Quality Assurance\approved QA\NCRWO RevE

Work Order ID 57157

March 24, 2010 8:43:25 AM

Item ID: D206-642-341

Revision ID:

Item Name: Replacement Skidtube

Start Date: 24/03/2010 **Start Qty:** 1.00

Required Date: 07/04/2010 **Req'd Qty:** 1.00

Reference:

Accept

Setup **Start**

Stop

Cust Item ID:

Customer:

Run **Start**

Stop

Approvals: **Process Plan:** _____ **Date:** _____ **Tooling:** _____ **Date:** _____

QC: _____ **Date:** _____ **SPC (Y/N):** _____ **Date:** _____

Sequence ID/ Work Center ID	Operation Description	Set Up/ Run Hours	Draw Number	Draw Rev.	Plan Code	Accept Qty	Reject Qty	Reject Number	Insp. Stamp
230 QC Quality Control	QC3- Inspect Part Finish **Memo**	0.00 0.00							
240 QC Quality Control	QC5- Inspect part completeness to step on W/O **Memo**	0.00 0.00				(40)			
250 Packaging Packaging	Packaging **Memo** Identify and pack for shipping as per PPP D206-642-341 Location:_____ PPP Rev: PP057159	0.00 0.00				10/07/26			

Dart Aerospace Ltd

W/O:		WORK ORDER CHANGES					
DATE	STEP	PROCEDURE CHANGE	By	Date	Qty	Approval Chief Eng / Prod Mgr	Approval QC Inspector

Part No: _____ PAR #: _____ Fault Category: _____ NCR: Yes No DQA: _____ Date: _____

Resolution: _____ Disposition: _____ QA: N/C Closed: _____ Date: _____

NCR:		WORK ORDER NON-CONFORMANCE (NCR)						
DATE	STEP	Description of NC Section A	Corrective Action Section B			Verification Section C	Approval Chief Eng	Approval QC Inspector
			Initial Chief Eng	Action Description Chief Eng	Sign & Date			

NOTE: Date & initial all entries

H:\fFORMS\Quality Assurance\approved QA\NCRWO RevE

Work Order ID 57157

March 24, 2010 8:43:25 AM

Item ID: D206-642-341

Revision ID:

Item Name: Replacement Skidtube

Start Date: 24/03/2010 **Start Qty:** 1.00

Required Date: 07/04/2010 **Req'd Qty:** 1.00

Reference:

Accept

Setup Start

Stop

Cust Item ID:

Customer:

Run Start

Stop

Approvals: **Process Plan:** _____ **Date:** _____ **Tooling:** _____ **Date:** _____

QC: _____ **Date:** _____ **SPC (Y/N):** _____ **Date:** _____

Sequence ID/ Work Center ID	Operation Description	Set Up/ Run Hours	Draw Number	Draw Rev.	Plan Code	Accept Qty	Reject Qty	Reject Number	Insp. Stamp
260	QC21- Final Inspection - Work Order Release	0.00							10/04/27
QC	**Memo**	0.00							
Quality Control									

MF
10-4-27

Dart Aerospace Ltd

W/O:		WORK ORDER CHANGES					
DATE	STEP	PROCEDURE CHANGE	By	Date	Qty	Approval Chief Eng / Prod Mgr	Approval QC Inspector

Part No: _____ **PAR #:** _____ **Fault Category:** _____ **NCR:** Yes No **DQA:** _____ **Date:** _____

Resolution: _____ **Disposition:** _____ **QA: N/C Closed:** _____ **Date:** _____

NCR:		WORK ORDER NON-CONFORMANCE (NCR)						
DATE	STEP	Description of NC Section A	Corrective Action Section B			Verification Section C	Approval Chief Eng	Approval QC Inspector
			Initial Chief Eng	Action Description Chief Eng	Sign & Date			

NOTE: Date & initial all entries

H:\fFORMS\Quality Assurance\approved QA\NCRWO RevE

Picklist Print

March 24, 2010 8:43:28 AM

9

Work Order ID: 57157

Parent Item: D206-642-341

Parent Item Name: Replacement Skidtube

Start Date: 24/03/2010 **Required Date:** 07/04/2010

Comments: IPP Rev: H□05.10.11□Added D3429-1 per CHG004□KJ/CP/JLM IPP Rev:I 08-09-29 revF as per dwg DD verified by:EC Est Rev:J 09-03-02 as per DSI9440 rev.a DD verified by:EC

Start Qty: 1.00 **Required Qty:** 1.00

Component Item ID/	Replacement	Mfg/	Bin	Primary	Last	Route	Unit of	Qty on	Remaining	Qty	Date	Status
AN960JD416		Purchased	No				Each	8.0000	1.0000			
Washer												

Warehouse Location	Loc Qty	Loc Code
Main Warehouse		
ST357	8	
111279	8	

NAS1149D0463J

IB706

1

BR 10-4-19.

Component Item ID/	Replacement	Mfg/	Bin	Primary	Last	Route	Unit of	Qty on	Remaining	Qty	Date	Status
CCR264SS3-3		Purchased	No				Each	513.0000	2.0000			
Cherry Rivet												

Warehouse Location	Loc Qty	Loc Code
Main Warehouse		
ST311	513	
111548	16	
111827	1	
112314	2	
113539	6	
113973	488	

2

10-4-5

Component Item ID/	Replacement	Mfg/	Bin	Primary	Last	Route	Unit of	Qty on	Remaining	Qty	Date	Status
CR3212-4-03		Purchased	No				Each	236.0000	2.0000			
Cherry Rivet												

Warehouse Location	Loc Qty	Loc Code
Main Warehouse		
ST311	236	
111359	84	
112314	152	

2

10-4-5

Dart Aerospace Ltd

W/O:		WORK ORDER CHANGES					
DATE	STEP	PROCEDURE CHANGE	By	Date	Qty	Approval Chief Eng / Prod Mgr	Approval QC Inspector

Part No: _____ **PAR #:** _____ **Fault Category:** _____ **NCR:** Yes No **DQA:** _____ **Date:** _____

Resolution: _____ **Disposition:** _____ **QA: N/C Closed:** _____ **Date:** _____

NCR:		WORK ORDER NON-CONFORMANCE (NCR)						
DATE	STEP	Description of NC Section A	Corrective Action Section B			Verification Section C	Approval Chief Eng	Approval QC Inspector
			Initial Chief Eng	Action Description Chief Eng	Sign & Date			

NOTE: Date & initial all entries

H:\fFORMS\Quality Assurance\approved QA\NCRWO RevE

Picklist Print

March 24, 2010 8:43:28 AM

Work Order ID: 57157

Parent Item: D206-642-341

Parent Item Name: Replacement Skidtube

Comments: IPP Rev: H□05.10.11□Added D3429-1 per CHG004□KJ/CP/JLM
IPP Rev:I 08-09-29 revF as per dwg DD verified by:EC Est Rev:J 09-03-02 as per DSI9440 rev.a DD verified by:EC

Start Date: 24/03/2010 **Required Date:** 07/04/2010
Start Qty: 1.00 **Required Qty:** 1.00

Component Item ID/	Replacement	Mfg/	Bin	Primary	Last	Route	Unit of	Qty on	Remaining	Qty	Date	Status
D2620		Manufactured	No				Each	8.0000	1.0000			
Skidtube, 206 Skidtube												

Warehouse Location	Loc Qty	Loc Code
Main Warehouse		
LG	8	
55559	8	

DP 10-3-30

D2647		Manufactured	No				Each	87.0000	1.0000		
Cap											

Warehouse Location	Loc Qty	Loc Code
Main Warehouse		
FP	87	
55352	87	

1 BE 10-03-30

D2649		Manufactured	No				Each	207.0000	19.0000		
Cross Bolt Spacer											

Warehouse Location	Loc Qty	Loc Code
Main Warehouse		
LG	207	
36013	5	
47112	18	
48271	4	
51529	3	
55000	177	

19 BE 10/04/05

Dart Aerospace Ltd

W/O:		WORK ORDER CHANGES					
DATE	STEP	PROCEDURE CHANGE	By	Date	Qty	Approval Chief Eng / Prod Mgr	Approval QC Inspector

Part No: _____ **PAR #:** _____ **Fault Category:** _____ **NCR:** Yes No **DQA:** _____ **Date:** _____

Resolution: _____ **Disposition:** _____ **QA: N/C Closed:** _____ **Date:** _____

NCR:		WORK ORDER NON-CONFORMANCE (NCR)						
DATE	STEP	Description of NC Section A	Corrective Action Section B			Verification Section C	Approval Chief Eng	Approval QC Inspector
			Initial Chief Eng	Action Description Chief Eng	Sign & Date			

NOTE: Date & initial all entries

H:\fFORMS\Quality Assurance\approved QA\NCRWO RevE

Picklist Print

March 24, 2010 8:43:28 AM

Work Order ID: 57157

Parent Item: D206-642-341

Parent Item Name: Replacement Skidtube

Comments: IPP Rev: H□05.10.11□Added D3429-1 per CHG004□KJ/CP/JLM
IPP Rev:I 08-09-29 revF as per dwg DD verified by:EC Est Rev:J 09-03-02 as per DSI9440 rev.a DD verified by:EC

Start Date: 24/03/2010 **Required Date:** 07/04/2010
Start Qty: 1.00 **Required Qty:** 1.00

Component Item ID/	Replacement	Mfg/	Bin	Primary	Last	Route	Unit of	Qty on	Remaining	Qty	Date	Status
D2654-5		Manufactured	No				Each	2.0000	1.0000			
Web												

Warehouse Location	Loc Qty	Loc Code
Main Warehouse		
LG	2	
46638	2	

B-57241 -AWM 10-3-31 (*)

Component Item ID/	Replacement	Mfg/	Bin	Primary	Last	Route	Unit of	Qty on	Remaining	Qty	Date	Status
D2680-041		Manufactured	No				Each	51.0000	1.0000			
Nut Plate												

Warehouse Location	Loc Qty	Loc Code
Main Warehouse		
ST021	51	
33061	1	
55366	50	

(1) DP 10-4-5

Component Item ID/	Replacement	Mfg/	Bin	Primary	Last	Route	Unit of	Qty on	Remaining	Qty	Date	Status
ALS4-1032-130		Purchased	No			220	Each	438.0000	54.0000			
Insert												

Warehouse Location	Loc Qty	Loc Code
Main Warehouse 113238		
ST282	438	
110511	438	

ALS7-1032-130

54. BL 10-4-19

Dart Aerospace Ltd

W/O:		WORK ORDER CHANGES					
DATE	STEP	PROCEDURE CHANGE	By	Date	Qty	Approval Chief Eng / Prod Mgr	Approval QC Inspector

Part No: _____ PAR #: _____ Fault Category: _____ NCR: Yes No DQA: _____ Date: _____

Resolution: _____ Disposition: _____ QA: N/C Closed: _____ Date: _____

NCR:		WORK ORDER NON-CONFORMANCE (NCR)						
DATE	STEP	Description of NC Section A	Corrective Action Section B			Verification Section C	Approval Chief Eng	Approval QC Inspector
			Initial Chief Eng	Action Description Chief Eng	Sign & Date			

NOTE: Date & initial all entries

H:\fFORMS\Quality Assurance\approved QA\NCRWO RevE

Picklist Print

March 24, 2010 8:43:28 AM

Work Order ID: 57157

Parent Item: D206-642-341

Parent Item Name: Replacement Skidtube

Start Date: 24/03/2010 **Required Date:** 07/04/2010

Start Qty: 1.00 **Required Qty:** 1.00

Comments: IPP Rev: H□05.10.11□Added D3429-1 per CHG004□KJ/CP/JLM
IPP Rev:I 08-09-29 revF as per dwg DD verified by:EC Est Rev:J 09-03-02 as per DSI9440 rev.a DD verified by:EC

Component Item ID/	Replacement	Mfg/	Bin	Primary	Last	Route	Unit of	Qty on	Remaining	Qty	Date	Status
* AN960C10L		Purchased	No			220	Each	0.0000	54.0000	54.	BR 10-4-19.	
washer				NAS 1149C0332R .113524								
AN960JD10L		Purchased	No			220	Each	3,003.000	2.0000			
Washer												

Warehouse Location	Loc Qty	Loc Code	Qty	Date
Main Warehouse				
ST348	3003			
101291	16			
105793	49			
110985 ✓	2938		2	BR 10-4-19.

D2646		Manufactured	No			220	Each	41.0000	1.0000			
Aft Cap												

Warehouse Location	Loc Qty	Loc Code	Qty	Date
Main Warehouse				
FP6	36			
46327	4			
48109	4			
52663 ✓	28		1	BR 10-4-19.
Main Warehouse				
fp7	5			
52663	5			

Dart Aerospace Ltd

W/O:		WORK ORDER CHANGES					
DATE	STEP	PROCEDURE CHANGE	By	Date	Qty	Approval Chief Eng / Prod Mgr	Approval QC Inspector

Part No: _____ PAR #: _____ Fault Category: _____ NCR: Yes No DQA: _____ Date: _____

Resolution: _____ Disposition: _____ QA: N/C Closed: _____ Date: _____

NCR:		WORK ORDER NON-CONFORMANCE (NCR)						
DATE	STEP	Description of NC Section A	Corrective Action Section B			Verification Section C	Approval Chief Eng	Approval QC Inspector
			Initial Chief Eng	Action Description Chief Eng	Sign & Date			

NOTE: Date & initial all entries

H:\fFORMS\Quality Assurance\approved QA\NCRWO RevE

Picklist Print

March 24, 2010 8:43:28 AM

Work Order ID: 57157

Parent Item: D206-642-341

Parent Item Name: Replacement Skidtube

Comments: IPP Rev: H□05.10.11□Added D3429-1 per CHG004□KJ/CP/JLM
IPP Rev:I 08-09-29 revF as per dwg DD verified by:EC Est Rev:J 09-03-02 as per DSI9440 rev.a DD verified by:EC

Start Date: 24/03/2010 **Required Date:** 07/04/2010
Start Qty: 1.00 **Required Qty:** 1.00

Component Item ID/	Replacement	Mfg/	Bin	Primary	Last	Route	Unit of	Qty on	Remaining	Qty	Date	Status
D2651-1		Manufactured	No			220	Each	348.0000	14.0000			
Plug												

Warehouse Location	Loc Qty	Loc Code
Main Warehouse		
FP	141	
51530 ✓	141	
Main Warehouse		
fpa	207	
53349	207	

14 BR 10-4-19

D2651-3		Manufactured	No			220	Each	537.0000	14.0000			
O-Ring												

Warehouse Location	Loc Qty	Loc Code
Main Warehouse		
FP	537	
43849	3	
46114 ✓	534	

14. BR 10-4-19.

Dart Aerospace Ltd

W/O:		WORK ORDER CHANGES					
DATE	STEP	PROCEDURE CHANGE	By	Date	Qty	Approval Chief Eng / Prod Mgr	Approval QC Inspector

Part No: _____ PAR #: _____ Fault Category: _____ NCR: Yes No DQA: _____ Date: _____

Resolution: _____ Disposition: _____ QA: N/C Closed: _____ Date: _____

NCR:		WORK ORDER NON-CONFORMANCE (NCR)						
DATE	STEP	Description of NC Section A	Corrective Action Section B			Verification Section C	Approval Chief Eng	Approval QC Inspector
			Initial Chief Eng	Action Description Chief Eng	Sign & Date			

NOTE: Date & initial all entries

H:\fFORMS\Quality Assurance\approved QA\NCRWO RevE

Picklist Print

March 24, 2010 8:43:29 AM

Work Order ID: 57157

Parent Item: D206-642-341

Parent Item Name: Replacement Skidtube

Comments: IPP Rev: H□05.10.11□Added D3429-1 per CHG004□KJ/CP/JLM IPP Rev:I 08-09-29 revF as per dwg DD verified by:EC Est Rev:J 09-03-02 as per DSI9440 rev.a DD verified by:EC

Start Date: 24/03/2010 **Required Date:** 07/04/2010

Start Qty: 1.00 **Required Qty:** 1.00

Component Item ID/	Replacement	Mfg/	Bin	Primary	Last	Route	Unit of	Qty on	Remaining	Qty	Date	Status
D3535-11 Wearshoe		Manufactured	No			220	Each	6.0000	1.0000			
				Warehouse Location		Loc Qty		Loc Code				
				Main Warehouse FP 46647		6 6						
D3535-23 Wearshoe		Manufactured	No			220	Each	14.0000	1.0000	1	BL - 10-4-19	
				Warehouse Location		Loc Qty		Loc Code				
				Main Warehouse FP 53467 56054		14 2 12						
D3535-35 Wearshoe		Manufactured	No			220	Each	9.0000	1.0000	1	BL 10-4-19	
				Warehouse Location		Loc Qty		Loc Code				
				Main Warehouse FP 51608		9 9				1	BL 10-4-19	

Dart Aerospace Ltd

W/O:		WORK ORDER CHANGES					
DATE	STEP	PROCEDURE CHANGE	By	Date	Qty	Approval Chief Eng / Prod Mgr	Approval QC Inspector

Part No: _____ **PAR #:** _____ **Fault Category:** _____ **NCR:** Yes No **DQA:** _____ **Date:** _____

Resolution: _____ **Disposition:** _____ **QA: N/C Closed:** _____ **Date:** _____

NCR:		WORK ORDER NON-CONFORMANCE (NCR)						
DATE	STEP	Description of NC Section A	Corrective Action Section B			Verification Section C	Approval Chief Eng	Approval QC Inspector
			Initial Chief Eng	Action Description Chief Eng	Sign & Date			

NOTE: Date & initial all entries

H:\fFORMS\Quality Assurance\approved QA\NCRWO RevE

Picklist Print

March 24, 2010 8:43:29 AM

Work Order ID: 57157

Parent Item: D206-642-341

Parent Item Name: Replacement Skidtube

Comments: IPP Rev: H□05.10.11□Added D3429-1 per CHG004□KJ/CP/JLM
IPP Rev:I 08-09-29 revF as per dwg DD verified by:EC Est Rev:J 09-03-02 as per DSI9440 rev.a DD verified by:EC

Start Date: 24/03/2010
Start Qty: 1.00
Required Date: 07/04/2010
Required Qty: 1.00

Component Item ID/	Replacement	Mfg/	Bin	Primary	Last	Route	Unit of	Qty on	Remaining	Qty	Date	Status
D3536-11 Gasket		Manufactured	No			220	Each	14.0000	1.0000			

Warehouse Location	Loc Qty	Loc Code
Main Warehouse		
ST497A	14	
46649 ✓	10	
46715	4	

Component Item ID/	Replacement	Mfg/	Bin	Primary	Last	Route	Unit of	Qty on	Remaining	Qty	Date	Status
D3536-23 Gasket		Manufactured	No			220	Each	8.0000	1.0000	1	BR 10-4-19	

Warehouse Location	Loc Qty	Loc Code
Main Warehouse		
FP	8	
30754	1	
53468 ✓	7	

Component Item ID/	Replacement	Mfg/	Bin	Primary	Last	Route	Unit of	Qty on	Remaining	Qty	Date	Status
D3536-35 Gasket		Manufactured	No			220	Each	11.0000	1.0000	1	BR 10-4-19	

Warehouse Location	Loc Qty	Loc Code
Main Warehouse		
FP	11	
51628 ✓	11	

1 BR 10-4-19.

Dart Aerospace Ltd

W/O:		WORK ORDER CHANGES					
DATE	STEP	PROCEDURE CHANGE	By	Date	Qty	Approval Chief Eng / Prod Mgr	Approval QC Inspector

Part No: _____ **PAR #:** _____ **Fault Category:** _____ **NCR:** Yes No **DQA:** _____ **Date:** _____

Resolution: _____ **Disposition:** _____ **QA: N/C Closed:** _____ **Date:** _____

NCR:		WORK ORDER NON-CONFORMANCE (NCR)						
DATE	STEP	Description of NC Section A	Corrective Action Section B			Verification Section C	Approval Chief Eng	Approval QC Inspector
			Initial Chief Eng	Action Description Chief Eng	Sign & Date			

NOTE: Date & initial all entries

H:\fFORMS\Quality Assurance\approved QA\NCRWO RevE

Picklist Print

March 24, 2010 8:43:29 AM

Work Order ID: 57157

Parent Item: D206-642-341

Parent Item Name: Replacement Skidtube

Comments: IPP Rev: H□05.10.11□Added D3429-1 per CHG004□KJ/CP/JLM
IPP Rev:I 08-09-29 revF as per dwg DD verified by:EC Est Rev:J 09-03-02 as per DSI9440 rev.a DD verified by:EC

Start Date: 24/03/2010 **Required Date:** 07/04/2010
Start Qty: 1.00 **Required Qty:** 1.00

Component Item ID/	Replacement	Mfg/	Bin	Primary	Last	Route	Unit of	Qty on	Remaining	Qty	Date	Status
D3537-1		Manufactured	No			220	Each	53.0000	6.0000			
Wearpad												

Warehouse Location	Loc Qty	Loc Code	Qty	Date
Main Warehouse				
FP 57510	52		4	BL 10-4-19
48288	2			
55465 ✓	50		2.	BL 10-4-19
Main Warehouse				
FP17	1			
51678	1			

D3537-3		Manufactured	No			220	Each	24.0000	1.0000			
Wearpad												

Warehouse Location	Loc Qty	Loc Code	Qty	Date
Main Warehouse				
FP	24			
33881	4			
35697 ✓	20		1	BL 10-4-19.

Dart Aerospace Ltd

W/O:		WORK ORDER CHANGES					
DATE	STEP	PROCEDURE CHANGE	By	Date	Qty	Approval Chief Eng / Prod Mgr	Approval QC Inspector

Part No: _____ PAR #: _____ Fault Category: _____ NCR: Yes No DQA: _____ Date: _____

Resolution: _____ Disposition: _____ QA: N/C Closed: _____ Date: _____

NCR:		WORK ORDER NON-CONFORMANCE (NCR)						
DATE	STEP	Description of NC Section A	Corrective Action Section B			Verification Section C	Approval Chief Eng	Approval QC Inspector
			Initial Chief Eng	Action Description Chief Eng	Sign & Date			

NOTE: Date & initial all entries

H:\fFORMS\Quality Assurance\approved QA\NCRWO RevE

Picklist Print

March 24, 2010 8:43:29 AM

Work Order ID: 57157

Parent Item: D206-642-341

Parent Item Name: Replacement Skidtube

Comments: IPP Rev: H□05.10.11□Added D3429-1 per CHG004□KJ/CP/JLM IPP Rev:I 08-09-29 revF as per dwg DD verified by:EC Est Rev:J 09-03-02 as per DSI9440 rev.a DD verified by:EC

Start Date: 24/03/2010
Start Qty: 1.00

Required Date: 07/04/2010
Required Qty: 1.00

Component Item ID/	Replacement	Mfg/	Bin	Primary	Last	Route	Unit of	Qty on	Remaining	Qty	Date	Status
MS27039-1-08		Purchased	No			220	Each	2,105.000	56.0000			
Screw												

Warehouse Location	Loc Qty	Loc Code
Main Warehouse	2105	
ST291	3	
110467	102	
110552	2000	
110835	220	

Each 38.0000 1.0000

56. AK 10-4-19

MS27039-4-06	Purchased	No
Screw		

Warehouse Location	Loc Qty	Loc Code
Main Warehouse	38	
ST292	38	
109061		

0 AK 10-4-19.

Dart Aerospace Ltd

W/O:		WORK ORDER CHANGES					
DATE	STEP	PROCEDURE CHANGE	By	Date	Qty	Approval Chief Eng / Prod Mgr	Approval QC Inspector

Part No: _____ PAR #: _____ Fault Category: _____ NCR: Yes No DQA: _____ Date: _____

Resolution: _____ Disposition: _____ QA: N/C Closed: _____ Date: _____

NCR:		WORK ORDER NON-CONFORMANCE (NCR)						
DATE	STEP	Description of NC Section A	Corrective Action Section B			Verification Section C	Approval Chief Eng	Approval QC Inspector
			Initial Chief Eng	Action Description Chief Eng	Sign & Date			

NOTE: Date & initial all entries

H:\fFORMS\Quality Assurance\approved QA\NCRWO RevE

QTY -1	QTY -3	QTY -5	QTY -7	PART NUMBER	DESCRIPTION
X				**D2650-1**	**SKIDTUBE ASSEMBLY**
	X			**D2650-3**	**SKIDTUBE ASSEMBLY**
		X		**D2650-5**	**SKIDTUBE ASSEMBLY**
			X	**D2650-7**	**SKIDTUBE ASSEMBLY**
1	1	1	1	D2600-1-160	EXTRUSION
1				D2654-1	WEB
	1			D2654-3	WEB
		1		D2654-5	WEB
			1	D2654-7	WEB
1	1	1	1	D2646	AFT CAP
1	1	1	1	D2647	CAP
17	18	19	23	D2649	CROSS BOLT SPACER
16	18	14	22	D2651-1	PLUG
16	18	14	22	D2651-3	O-RING
1	1	1	1	D2680-041	NUT PLATE
2	2			D3286-1	DOUBLER
2	2			D3286-3	STUD
42	44	54	60	ALS7-1032-130	INSERT (or AKS4-1032-130, ALS4-1032-130, ALS7-1032-130)
2	2	2	2	AN960JD10L	WASHER
2	2	2	2	CCR264SS3-3	RIVET
2	2	2	2	CR3212-4-03	RIVET
2	2	2	2	MS27039-1-08	SCREW
1	1	1	1	MS27039-4-06	SCREW
1	1	1	1	AN960JD416	WASHER
52	52			CR3212-4-04	RIVET

F

F

SHOP COPY
RETURN TO
ENGINEERING
UNCONTROLLED COPY
SUBJECT TO AMENDMENT
WITHOUT NOTICE
WORK ORDER
NO. 57157
BS 10-3-24

RELEASED
08.07.23 TP

NOTES:

1) MATERIAL: N/A
2) FINISH: -CHEMICAL CONVERSION COAT PER DART QSI 005 4.1
   -POWDER COAT WHITE (4.3.5.1) PER DART QSI 005 4.3
   -BLACK ANTI-SKID PAINT AS INDICATED TO 0.5 ABOVE LOCATION RIDGE PER DART QSI 005 4.4
3) TOLERANCES: PER DART QSI 018 UNLESS OTHERWISE NOTED
4) UNITS: INCHES UNLESS OTHERWISE NOTED
5) BREAK SHARP EDGES: 0.005 TO 0.010 MAX
6) IDENTIFICATION: NONE
7) WEIGHT: N/A
8) WELD PER DART QSI 004
9) DAMAGE TOLERANCE ON FWD BEND:
   THERE SHOULD BE NO VISIBLE WRINKLES IN THE BEND FROM THE GROUND TO A HEIGHT OF 5 INCHES ABOVE THE GROUND. IT IS ACCEPTABLE TO POLISH OUT GOUGES UP TO 0.020 DEEP IN THE BENT PORTION OF THE TUBE. A MAXIMUM REDUCTION IN DIAMETER OF 0.150" IS ACCEPTABLE IN THE BENT PORTION OF THE TUBE.
10) BOND WEB INTO OUTER TUBE WITH SIKAFLEX-241/-291 ADHESIVE PER DART QSI 015
11) INSERT D2651-1 PLUG C/W D2651-3 O-RING IN HOLES MARKED 'P' (BOTH SIDES OF TUBE)
12) DRILL Ø0.297 FOR ALS7-1032-130 INSERTS USING TEMPLATE DT8056-1 ON -1 TUBE, DT8056-3 ON -3 TUBE, DT8056-5 ON -5 TUBE, AND DT8056-7 ON -7 TUBE. INSTALL INSERTS AFTER FINISH.
13) TOLERANCES ARE PER DART QSI 018 UNLESS OTHERWISE NOTED

REV.	DESCRIPTION	BY	DATE
F	DRAWING UPDATED TO CURRENT STANDARDS. SHT 6 ADDED. ALL SECTION AND DETAIL VIEWS TRANSFERED TO SHT 6. SHT 1 IN PL PART D2649 QTY UPDATED. SHT 6 SECT C-C GRIND INSTRUCTIONS DELETED FROM NOTE 7 (SEE NCR 239).	AJS	08.08.08
E	RMOVE CBORE, CHG DRILL, ADD CHAMFER	CP	06.03.30
D	REDRAW; INCORP. DEO9136/9153/9163 MOD GROUND HANDLING ON D2650-1/-3	CP	04.05.17
C	CHANGE HOLE PATTERN AND FRONT END	DS	97.10.29
B	AS MANUFACTURED CHANGES	DS	97.06.26
A	NEW ISSUE	DS	97.03.25

DESIGN	DS	**DART AEROSPACE USA, INC** PORT HADLOCK, WA	
DRAWN	AJS		
CHECKED		DRAWING NO. D2650	REV. F SHEET 1 OF 6
MFG. APPR.			
APPROVED		TITLE 206/407 SKIDTUBE ASSEMBLIES	SCALE NTS
DE APPR.			
DATE	08.08.08		

COPYRIGHT © 1997 BY DART AEROSPACE USA, INC
THIS DOCUMENT IS PRIVATE AND CONFIDENTIAL AND IS SUPPLIED ON THE EXPRESS CONDITION THAT IT IS NOT TO BE USED FOR ANY PURPOSE OR COPIED OR COMMUNICATED TO ANY OTHER PERSON WITHOUT WRITTEN PERMISSION FROM DART AEROSPACE USA, INC.

Dart Aerospace Ltd

W/O:		WORK ORDER CHANGES					
DATE	STEP	PROCEDURE CHANGE	By	Date	Qty	Approval Chief Eng / Prod Mgr	Approval QC Inspector

Part No: _____ **PAR #:** _____ **Fault Category:** _____ **NCR:** Yes No **DQA:** _____ **Date:** _____

Resolution: _____ **Disposition:** _____ **QA: N/C Closed:** _____ **Date:** _____

NCR:		WORK ORDER NON-CONFORMANCE (NCR)						
DATE	STEP	Description of NC Section A	Corrective Action Section B			Verification Section C	Approval Chief Eng	Approval QC Inspector
			Initial Chief Eng	Action Description Chief Eng	Sign & Date			

NOTE: Date & initial all entries

H:\fFORMS\Quality Assurance\approved QA\NCRWO RevE

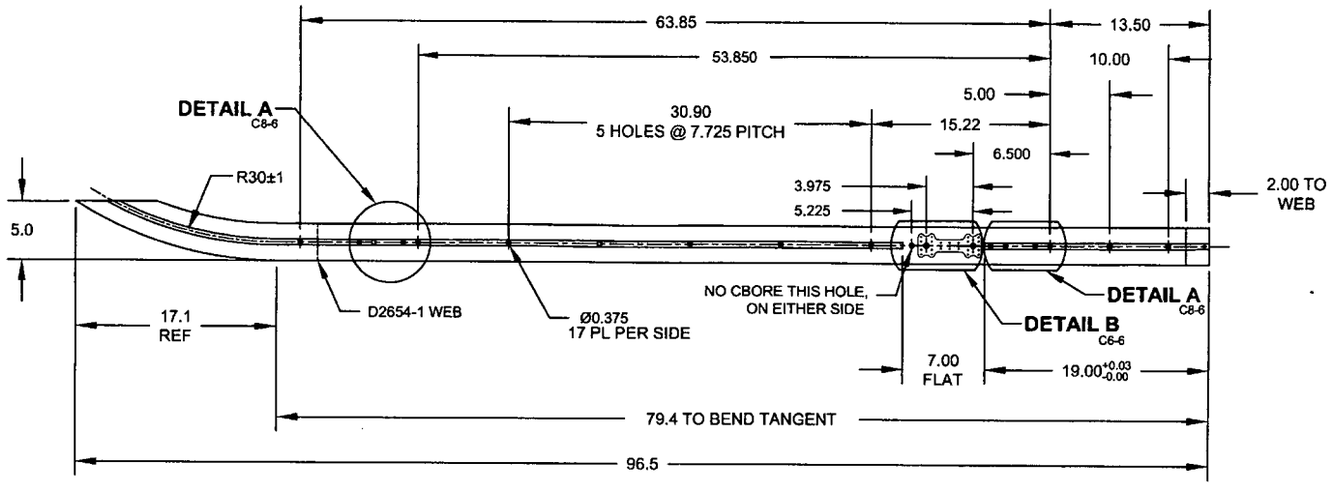

D2650-1 BENDING/DRILLING DETAIL

57157

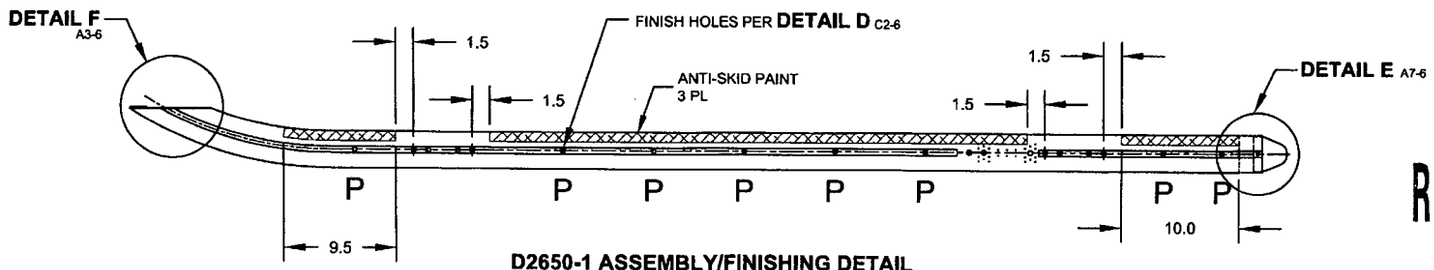

D2650-1 ASSEMBLY/FINISHING DETAIL

RELEASED 08.09.22

DESIGN	DS	DART AEROSPACE USA, INC PORT HADLOCK, WA
DRAWN	AJS	
CHECKED		DRAWING NO. REV. F
MFG. APPR.		D2650 SHEET 2 OF 6
APPROVED		TITLE SCALE
DE APPR.		206/407 SKIDTUBE ASSEMBLIES NTS
DATE	08.08.08	

COPYRIGHT © 1997 BY DART AEROSPACE USA, INC
THIS DOCUMENT IS PRIVATE AND CONFIDENTIAL AND IS SUPPLIED ON THE EXPRESS CONDITION THAT IT IS NOT TO BE USED FOR ANY PURPOSE OR COPIED OR COMMUNICATED TO ANY OTHER PERSON WITHOUT WRITTEN PERMISSION FROM DART AEROSPACE USA, INC.

Dart Aerospace Ltd

W/O:		WORK ORDER CHANGES					
DATE	STEP	PROCEDURE CHANGE	By	Date	Qty	Approval Chief Eng / Prod Mgr	Approval QC Inspector

Part No: _____ **PAR #:** _____ **Fault Category:** _____ **NCR:** Yes No **DQA:** _____ **Date:** _____

Resolution: _____ **Disposition:** _____ **QA: N/C Closed:** _____ **Date:** _____

NCR:		WORK ORDER NON-CONFORMANCE (NCR)						
DATE	STEP	Description of NC Section A	Corrective Action Section B			Verification Section C	Approval Chief Eng	Approval QC Inspector
			Initial Chief Eng	Action Description Chief Eng	Sign & Date			

NOTE: Date & initial all entries

H:\fFORMS\Quality Assurance\approved QA\NCRWO RevE

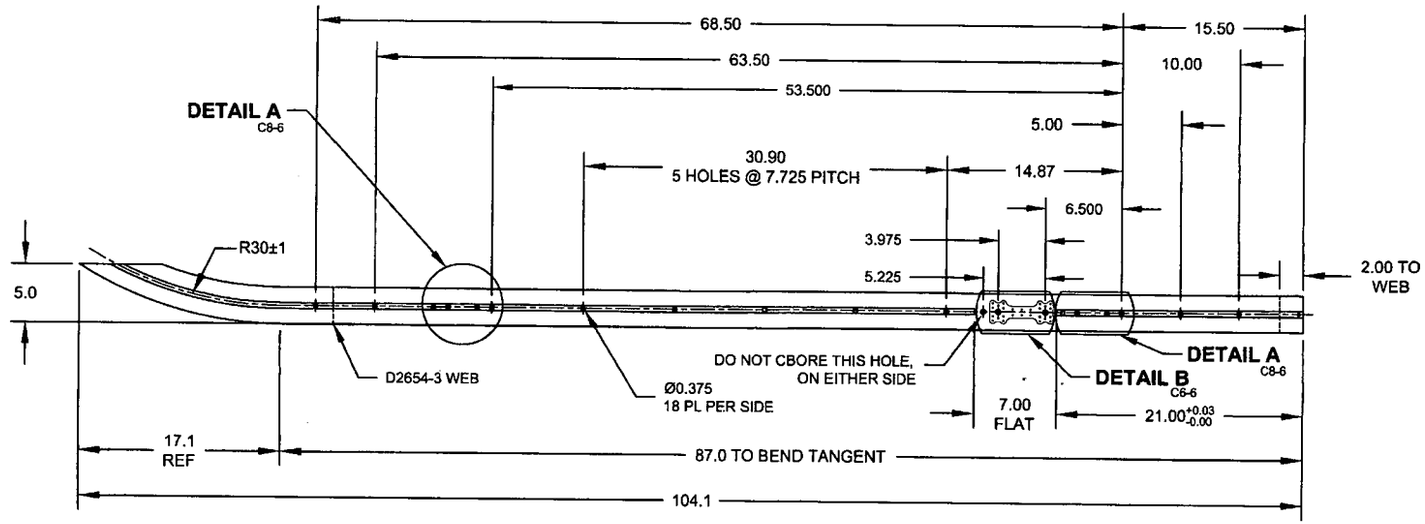

D2650-3 BENDING/DRILLING DETAIL

57/57

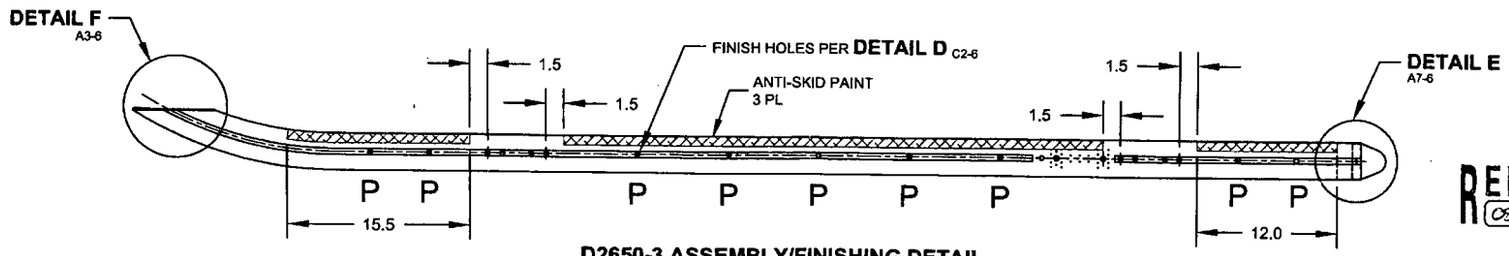

D2650-3 ASSEMBLY/FINISHING DETAIL

RELEASED 08.07.22

DESIGN	DS	DART AEROSPACE USA, INC PORT HADLOCK, WA
DRAWN	AJS	
CHECKED		DRAWING NO. REV. F
MFG. APPR.		D2650 SHEET 3 OF 6
APPROVED		TITLE SCALE
DE APPR.		206/407 SKIDTUBE ASSEMBLIES NTS
DATE	08.08.08	

COPYRIGHT © 1997 BY DART AEROSPACE USA, INC
THIS DOCUMENT IS PRIVATE AND CONFIDENTIAL AND IS SUPPLIED ON THE EXPRESS CONDITION THAT IT IS NOT TO BE USED FOR ANY PURPOSE OR COPIED OR COMMUNICATED TO ANY OTHER PERSON WITHOUT WRITTEN PERMISSION FROM DART AEROSPACE USA, INC.

Dart Aerospace Ltd

W/O:		WORK ORDER CHANGES					
DATE	STEP	PROCEDURE CHANGE	By	Date	Qty	Approval Chief Eng / Prod Mgr	Approval QC Inspector

Part No: _____ **PAR #:** _____ **Fault Category:** _____ **NCR:** Yes No **DQA:** _____ **Date:** _____

Resolution: _____ **Disposition:** _____ **QA: N/C Closed:** _____ **Date:** _____

NCR:		WORK ORDER NON-CONFORMANCE (NCR)						
DATE	STEP	Description of NC Section A	Corrective Action Section B			Verification Section C	Approval Chief Eng	Approval QC Inspector
			Initial Chief Eng	Action Description Chief Eng	Sign & Date			

NOTE: Date & initial all entries

H:\fFORMS\Quality Assurance\approved QA\NCRWO RevE

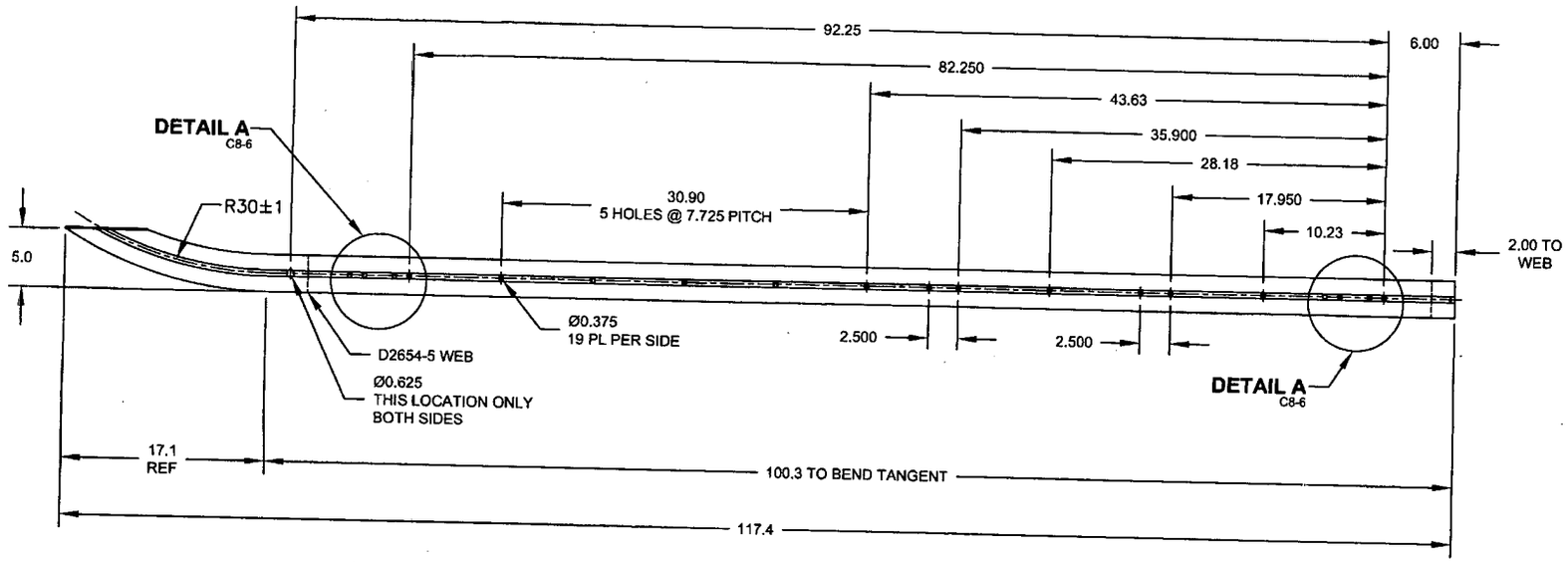

D2650-5 BENDING/DRILLING DETAIL

57157

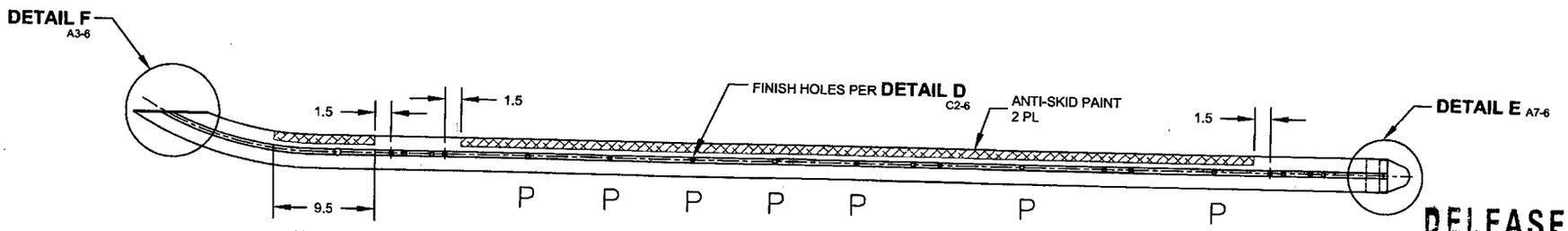

RELEASED 08.09.22

D2650-5 ASSEMBLY/FINISHING DETAIL

DESIGN	DS	DART AEROSPACE USA, INC PORT HADLOCK, WA
DRAWN	AJS	
CHECKED		DRAWING NO. D2650 — REV. F — SHEET 4 OF 6
MFG. APPR.		
APPROVED		TITLE: 206/407 SKIDTUBE ASSEMBLIES — SCALE: NTS
DE APPR.		
DATE	08.08.08	

COPYRIGHT © 1997 BY DART AEROSPACE USA, INC
THIS DOCUMENT IS PRIVATE AND CONFIDENTIAL AND IS SUPPLIED ON THE EXPRESS CONDITION THAT IT IS NOT TO BE USED FOR ANY PURPOSE OR COPIED OR COMMUNICATED TO ANY OTHER PERSON WITHOUT WRITTEN PERMISSION FROM DART AEROSPACE USA, INC.

Dart Aerospace Ltd

W/O:		WORK ORDER CHANGES					
DATE	STEP	PROCEDURE CHANGE	By	Date	Qty	Approval Chief Eng / Prod Mgr	Approval QC Inspector

Part No: _____ PAR #: _____ Fault Category: _____ NCR: Yes No DQA: _____ Date: _____

Resolution: _____ Disposition: _____ QA: N/C Closed: _____ Date: _____

NCR:		WORK ORDER NON-CONFORMANCE (NCR)						
DATE	STEP	Description of NC Section A	Corrective Action Section B			Verification Section C	Approval Chief Eng	Approval QC Inspector
			Initial Chief Eng	Action Description Chief Eng	Sign & Date			

NOTE: Date & initial all entries

H:\fFORMS\Quality Assurance\approved QA\NCRWO RevE

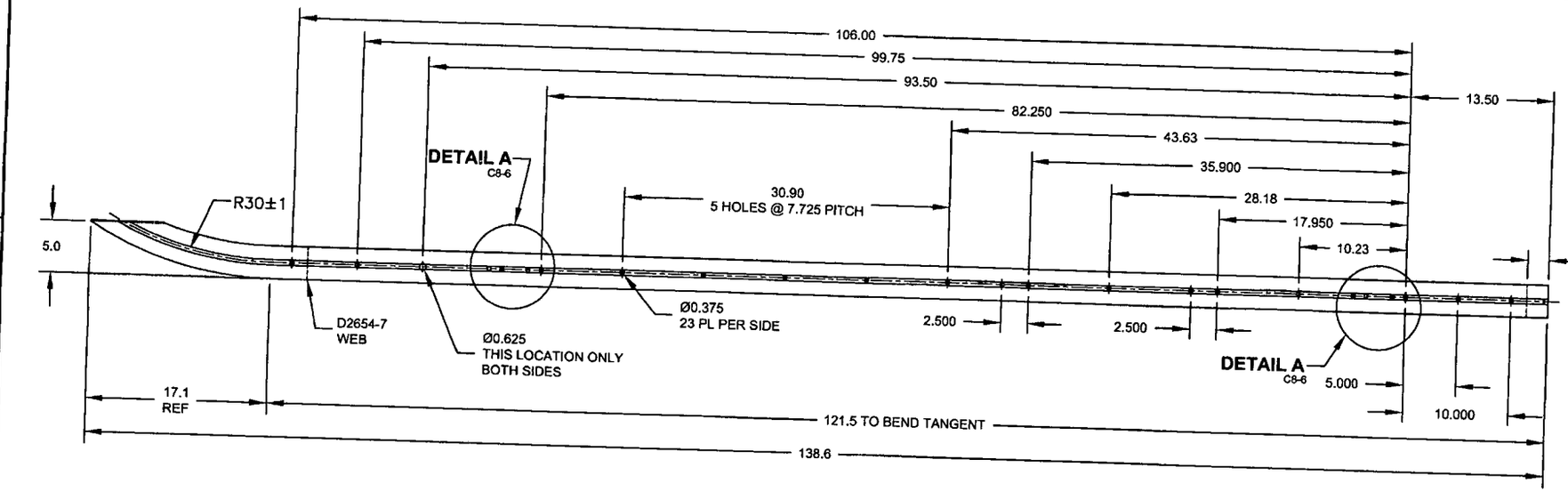

D2650-7 BENDING/DRILL DETAIL

57157

RELEASED 08.07.22

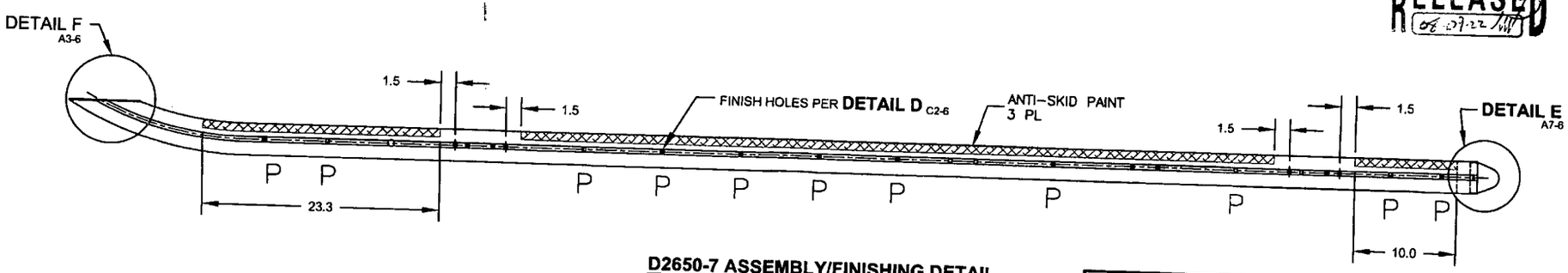

D2650-7 ASSEMBLY/FINISHING DETAIL

DESIGN	DS	DART AEROSPACE USA, INC PORT HADLOCK, WA
DRAWN	AJS	
CHECKED		DRAWING NO. D2650 — REV. F — SHEET 5 OF 6
MFG. APPR.		
APPROVED		TITLE: 206/407 SKIDTUBE ASSEMBLIES — SCALE: NTS
DE APPR.		
DATE	08.08.08	

COPYRIGHT © 1997 BY DART AEROSPACE USA, INC
THIS DOCUMENT IS PRIVATE AND CONFIDENTIAL AND IS SUPPLIED ON THE EXPRESS CONDITION THAT IT IS NOT TO BE USED FOR ANY PURPOSE OR COPIED OR COMMUNICATED TO ANY OTHER PERSON WITHOUT WRITTEN PERMISSION FROM DART AEROSPACE USA, INC.

Dart Aerospace Ltd

W/O:		WORK ORDER CHANGES					
DATE	STEP	PROCEDURE CHANGE	By	Date	Qty	Approval Chief Eng / Prod Mgr	Approval QC Inspector

Part No: _____ PAR #: _____ Fault Category: _____ NCR: Yes No DQA: _____ Date: _____

Resolution: _____ Disposition: _____ QA: N/C Closed: _____ Date: _____

NCR:		WORK ORDER NON-CONFORMANCE (NCR)						
DATE	STEP	Description of NC Section A	Corrective Action Section B			Verification Section C	Approval Chief Eng	Approval QC Inspector
			Initial Chief Eng	Action Description Chief Eng	Sign & Date			

NOTE: Date & initial all entries

H:\fFORMS\Quality Assurance\approved QA\NCRWO RevE

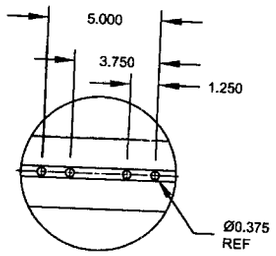

DETAIL A C2-2 D7-2 C2-3 D7-3 C2-4 D7-4 C2-5 D6-5
SCALE 2X

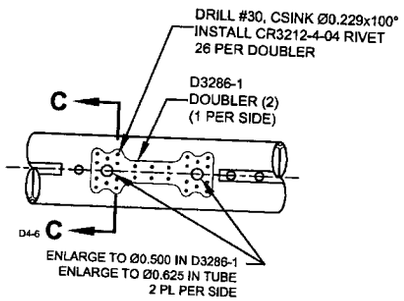

DETAIL B C3-2 C3-3
SCALE 2X

SECTION C-C C7-6
SCALE NONE

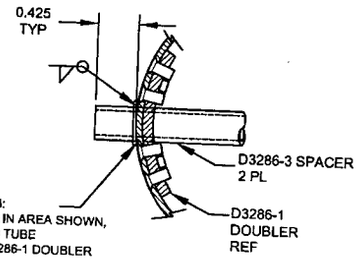

TO INSTALL D3286-1/-3:
1. GRIND OFF FLANGE IN AREA SHOWN, FLUSH WITH ROUND TUBE
2. LOCATE & DRILL D3286-1 DOUBLER USING DT3286-1T1
3. ENLARGE HOLES IN D3286-1 TO Ø0.500
4. ENLARGE HOLES IN TUBE TO Ø0.625 AND CHAMFER HOLE 0.030x45°
5. RIVET D3286-1 TO TUBE
6. INSERT D3286-3 SPACER
7. WELD IN PLACE.

F

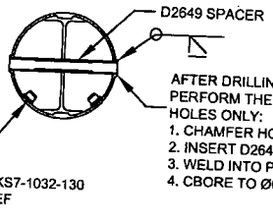

AFTER DRILLING AND BENDING ASSEMBLY PERFORM THE FOLLOWING FOR Ø0.375 HOLES ONLY:
1. CHAMFER HOLE 0.030 X 45°
2. INSERT D2649 SPACER
3. WELD INTO PLACE AND GRIND FLUSH
4. CBORE TO Ø0.313 X 0.75 DP

DETAIL D B4-2 B4-3 B4-4 B4-5
FOR Ø0.375 HOLES ONLY
SCALE 3X

57/57

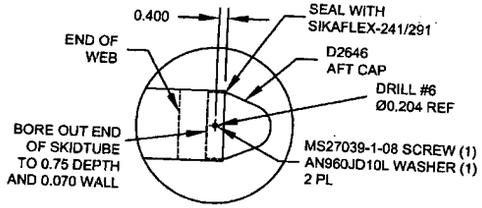

DETAIL E B2-2 B2-3 B1-4 B1-5
SCALE 2X

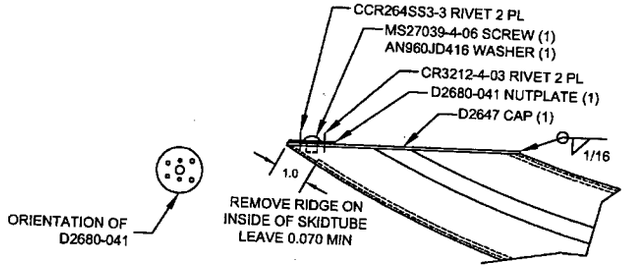

DETAIL F B8-2 B8-3 B8-4 B8-5
SCALE NONE

DETAIL F NOTES:
1. CUT TUBE LEVEL
2. REMOVE RIDGE ON FWD SIDE
3. LOCATE D2647 (TRIM AS NECESSARY)
4. WELD D2647 IN PLACE PER DART QSI 004
5. GRIND FLUSH
6. RIVET D2680-041 NUT PLATE IN PLACE

NOTE: MASK THREADS IN D2680-041 PRIOR TO FINISH

RELEASED 05-09-22

DESIGN	DS	**DART AEROSPACE USA, INC** PORT HADLOCK, WA
DRAWN	AJS	
CHECKED		DRAWING NO. D2650 — REV. F — SHEET 6 OF 6
MFG. APPR.		
APPROVED		TITLE: 206/407 SKIDTUBE ASSEMBLIES — SCALE: NTS
DE APPR.		
DATE	08.08.08	

COPYRIGHT © 1997 BY DART AEROSPACE USA, INC
THIS DOCUMENT IS PRIVATE AND CONFIDENTIAL AND IS SUPPLIED ON THE EXPRESS CONDITION THAT IT IS NOT TO BE USED FOR ANY PURPOSE OR COPIED OR COMMUNICATED TO ANY OTHER PERSON WITHOUT WRITTEN PERMISSION FROM DART AEROSPACE USA, INC.

Dart Aerospace Ltd

W/O:		WORK ORDER CHANGES					
DATE	STEP	PROCEDURE CHANGE	By	Date	Qty	Approval Chief Eng / Prod Mgr	Approval QC Inspector

Part No: _____ PAR #: _____ Fault Category: _____ NCR: Yes No DQA: _____ Date: _____

Resolution: _____ Disposition: _____ QA: N/C Closed: _____ Date: _____

NCR:		WORK ORDER NON-CONFORMANCE (NCR)						
DATE	STEP	Description of NC Section A	Corrective Action Section B			Verification Section C	Approval Chief Eng	Approval QC Inspector
			Initial Chief Eng	Action Description Chief Eng	Sign & Date			

NOTE: Date & initial all entries

H:\fFORMS\Quality Assurance\approved QA\NCRWO RevE

NO. 223

AWS D17.1.2001
QUALIFICATION TEST RECORD

Name: Barclay Elliott
Job number: J# 55777
Part number: 02060-642-441
Description: 206 skid tube
Welding Process: Tig[✓] Mig[ ]
Base materiel: Aluminium
Current: AC[✓] DC[ ]

TEST REQUIREMENTS AND RESULTS

Visual:	pass[✓]	fail[ ]
Penetration:	pass[✓]	fail[ ]

UNACCEPTABLE

Cracks:	pass[✓]	fail[ ]
Undercut:	pass[✓]	fail[ ]
Pin holes:	pass[✓]	fail[ ]
Overlap (cold lap)	pass[✓]	fail[ ]
Porosity (surface):	pass[✓]	fail[ ]
Coloration:	pass[✓]	fail[ ]

Qualifier Pat. [illegible] **Date of Test Coupon** 10.02.16

Welder Barclay Elliott **Date of Test Coupon** 10-02-16

The above named individual is qualified in accordance with AWS D17.1.2001 to weld